Rotron Model R Type 505 Radial Blowers

General Radial Blower Information

Rotron Radial Blowers are unusually small and compact in design. They are available in CW or CCW, and in either simplex or duplex models. Duplex Blowers simplify ductwork and allow for greater volume performance in tight locations. Models are available for DC power.

Radial Blowers come in a variety of voltages and frequencies and are available with a variety of inlet and outlet configurations. Most units are available with an optional internal Fan Performance Sensor (FPS) or external Low Speed Warning Device (LSWD).

Rotron Model R Type 505

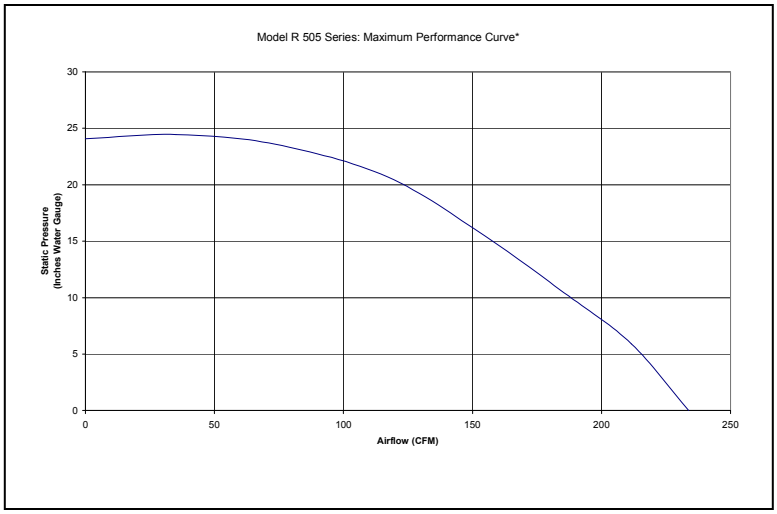

*Individual Performance Curve Characteristics Available Upon Request; Blower should not be run at free delivery

General

- Physical envelope: inlet diameter is 2.4 – 2.75”; length is between 7.7 – 9.6” [1].
- Weight: 13.4 - 14.5 lbs.
- Produces higher pressure-to-volume ratio than is obtainable from centrifugal blowers.
- For protection of environmental hazards.
- 24/28 VDC brushless motors.
- AC power models available on request.

Materials and Finishes

- Aluminum components finished with a chemical conversion coating per MIL-C-5541, top coat of black, color #37038, per Federal Standard 595 conforming to TT-E-489 Type B.
- Steel housing coated with epoxy powder coat.
- Corrosion-resistant stainless steel shaft and hardware.
- Impeller runs on two high-precision, double-shielded, stainless steel ball bearings (ABEC Class 7) contains integral grease reservoir for a long, maintenance-free life.
- Stator wound in accordance with the specifications for Class H or F insulation.
- CARC paint finish available.

[1] See specific part-number drawing for complete product dimensions

Options/Accessories

- LSWD (Low Speed Warning Device)
- FPS (Fan Performance Sensor)
- Variable speed control on DC power models

Specifications subject to change without notice

AMETEK®
AEROSPACE & DEFENSE
Rotron / Airtechnology Products

North America
T: +1 845-679-1361
F: +1 845-679-1870

United Kingdom
T: +44 (0) 1932 765822
F: +44 (0) 1932 761098

Europe
T: +49 8145 951767
F: +49 8145 951768

Asia Pacific
T: +65 6484 2388
F: +65 6481 6588

www.ametekaerodefense.com
Contact E-mail: milinquiry@ametek.com

DC Line Powered Units - E.C.D.C.® [1]

- Brushless permanent magnet design (Electronically Commutated DC).
- Speed (performance) fixed by input voltage or external DC control voltage.
- Meets or exceeds the requirements of MIL-B-28873 and other applicable U.S. military and commercial aerospace specifications [2].
- Free delivery airflow of 229 - 248 CFM [1].
- Ambient temperature range: -54°C to 60°C [1].
- Acoustic levels as low as 80.9 dBA [1].

[1] Airflow, maximum ambient and acoustic levels will vary depending on design parameters

[2] Please call for further information concerning applicable U.S. military and commercial aerospace specifications

Unit Description Key

The unit description key is for reference only and should not be confused with a part number. While most units are custom configurations, not all variations of the key shown below are possible. Please contact the Application Engineering department for more information regarding possible custom configurations.

MODEL: A = 96 FR. MOTOR
B = 64 FR. MOTOR
C = 25 FR. ECDC MOTOR
D = 33 & 47 FR. MOTOR
R = RADIAL BLADE WHEEL

OUTLET SHAPE: R = RECTANGULAR, C = CIRCULAR (MODELS 201 & 301 ONLY)

OUTLET CONFIGURATION: P = PLAIN
F = FLANGE
D = DUCT CLAMPS
C = COLLAR (NO LONGER USED)
B = BEADED

INLET CONFIGURATION: P = PLAIN RING
S = PLAIN RING WITH GUARD
C = CONE (WITH CLAMP)
M = CONE (MOUNTING)
N = NOZZLE
R = RIM (WITH HOSE CLAMP)

I = INVERTED (ON MODEL "D" ONLY)
N = NO BASE PLATE (ON MODEL "A" ONLY)
F = 4 POINT BASE PLATE (ON MODEL "A" ONLY)

DRPPI / KS 45 02 CW 94AF ← FOR COMPLETE DESCRIPTION ADD MOTOR DESCRIPTION & BLAST. ON MODEL "A" SPECIFY IF BASE PLATE IS FOR OVERHEAD MOUNTING

BLOWER ROTATION

ROTRON DESIGN NO. (2 DIGITS)

APPROX. WHEEL DIA.: 1 DIGIT = INCHES
2 DIGITS = INCHES & TENTHS (4.5" DIA.)

S = SIMPLEX, D = DUPLEX

"X" IN ANY POSITION DENOTES SPECIAL FOR THAT FEATURE

EXAMPLE: DRPPI/KS 4502 CW

DUPLEX VARIATIONS:
*1st CALLOUT IS THE STD SIMPLEX
*2nd CALLOUT IS THE DUPLEX END
EX: DRPP/KD4502CW (3:00) CCW (12:00)
EX: DRPP/DRFS/KD4502

	NO. POLES	NO. PHASES	APPROX. SPEED- NO LOAD (REF.) 50 Hz	60 Hz	400 Hz
A	2	3	2900	3400	-
B	4	3	1450	1750	-
E	6	1 OR 3	950	1150	-
F	8	1 OR 3	700	850	-
K	2	1	2900	3500	-
L	4	1	1450	1750	-
M	6	1 OR 3	-	-	7500
N	8	1 OR 3	-	-	5500
P	12	1 OR 3	-	-	3900
Q	4	1 OR 3	-	-	11000
R	2	1 OR 3	-	-	23000
V	ECDC				

NOTE: DUAL FREQUENCY OR DUAL POLE MOTORS DESIGNATED BY USING 2 DIGITS. EX: KM = (2 POLE 1Φ 50/60 Hz, 6 POLE 1Φ 400 Hz)

Ordering Information

When ordering, please specify the specific Rotron part number listed on the following model table. Further ordering information, based on the configuration and motor series, may be obtained by contacting customer service. Please refer to the Unit Description Key explanation above.

Standard Product Offering of DC Line Powered Model R Type 505

Part #	Product Description	Flow (CFM)	Max Pressure (IWG)	Nom. RPM	Nom. Watts	Line Amps (A)	Max Amb (C)	Weight	Volts	Airflow Source Data	Features
011693000	RRFN, VS505CW	229	23.4	13,000	672	28	60	14.5	24	A743-20A	MS CONNECTOR, MINT GREEN PAINT
011737000	RRFN, VS505CW	248	34.7	10,800	798	28.5	60	14.5	28	A744-17B	MS CONNECTOR

MODEL R TYPE 505

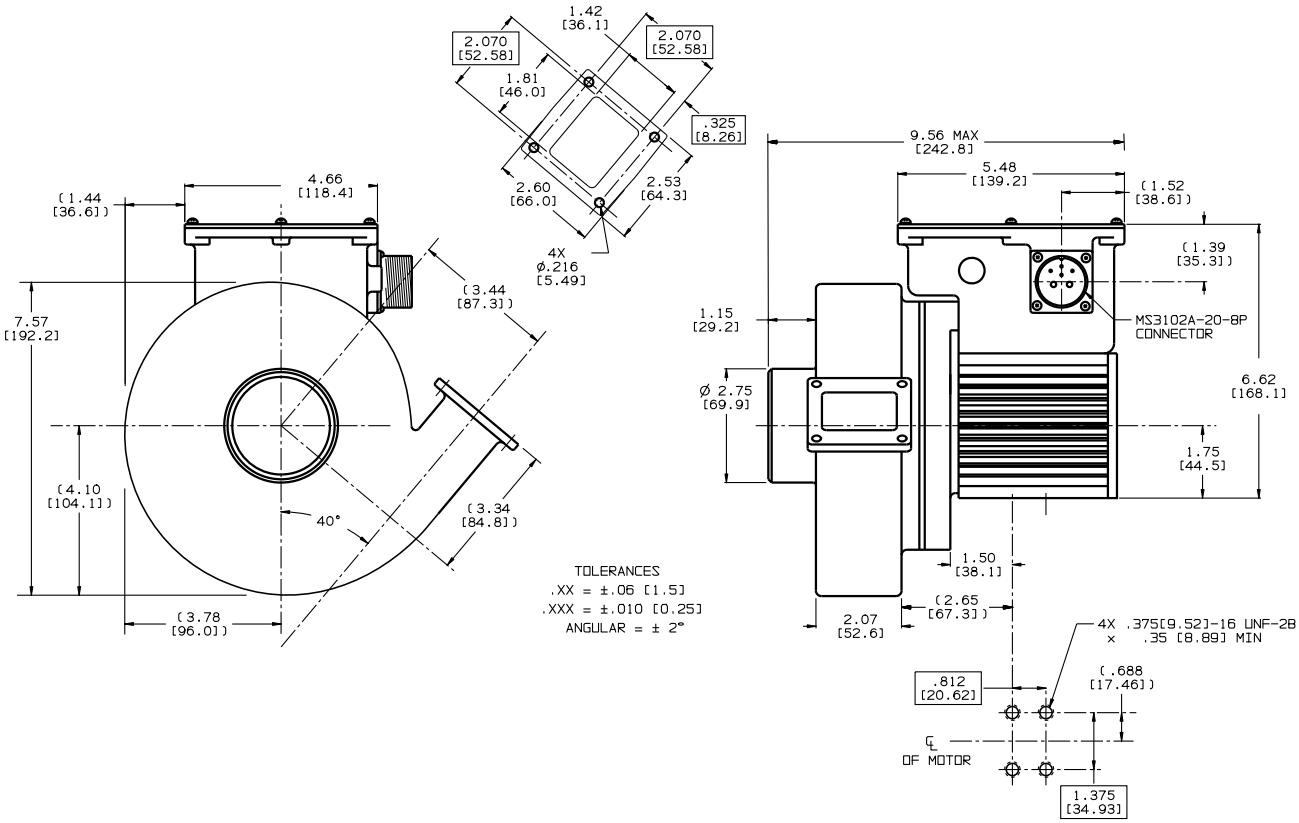

Specifications subject to change without notice

North America
T: +1 845-679-1361
F: +1 845-679-1870

United Kingdom
T: +44 (0) 1932 765822
F: +44 (0) 1932 761098

Europe
T: +49 8145 951767
F: +49 8145 951768

Asia Pacific
T: +65 6484 2388
F: +65 6481 6588

www.ametekaerodefense.com
Contact E-mail: milinquiry@ametek.com

PERFORMANCE CURVES

A743-20A

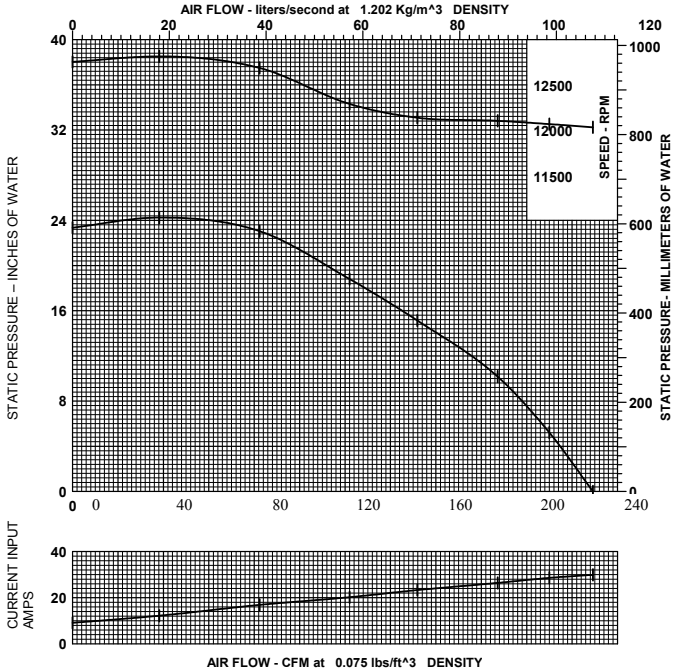
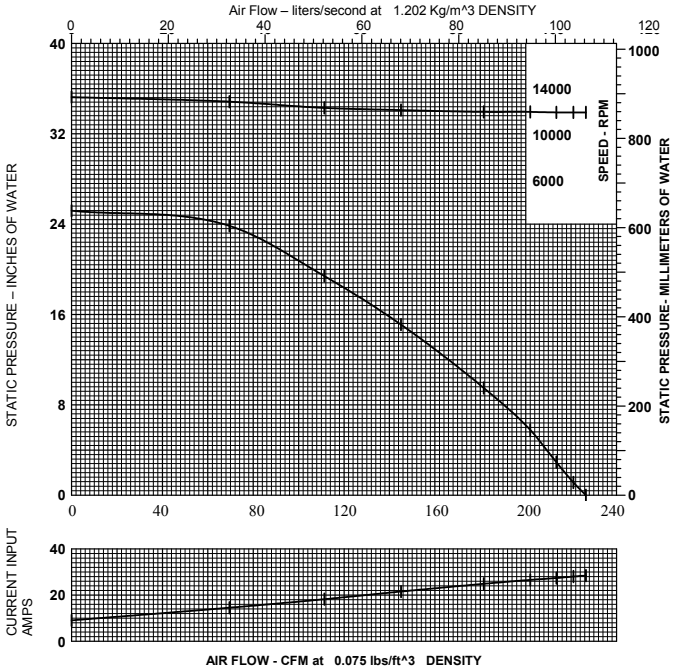
A744-17B